YOUR PROCESS...
...OUR CARE

DINNISSEN NATURAL INNOVATORS
PROCESS TECHNOLOGY

PRODUCT INTAKE

DIMA® BAG EMPTYING

Emptying bags
safely and efficiently for the food, feed, pharma and chemical industries

Do you need to empty and handle bags quickly and efficiently and/or as safely as possible with an emphasis on optimizing working conditions? We can do all of this via fully automated, semi-automated or even manual processes at capacities of 1200 bags per hour. At Dinnissen Process Technology, we are used to dealing with a wide range of challenges and to providing solutions that are economical, efficient and environmentally friendly.

Powders, pellets and granulate

Regardless of whether you have to deal with single-layer or double-layer bags made of synthetics, paper or jute and filled with powders, pellets or granulate, our rotating and extra long-life knives make short work of even the most difficult jobs. We simply make use of our lump breakers and/or intrinsically safe constructions; for products with very difficult flow characteristics, we apply fluidization or mechanical activation techniques. Finally, we deal with the mechanical or pneumatic discharge of your products, so that you can continue processing them further elsewhere.

Particle-free in the interests of health and safety

Working in a particle-free environment is essential for ensuring a healthy and safe working environment within your company, especially when dealing with toxic and/or aggressive bulk products. That is also why our bag emptying systems are equipped with integrated functionality preventing the emission of particles, for example with a completely dustproof unit fitted with its own ventilation unit or a central ventilation system. We also developed an intrinsically safe model of our bag emptying system suitable for use with materials that pose an explosion hazard.

Ultra hygiene in accordance with international standards

Quality and food safety are critical for many of our customers, which is why we have developed a great many in-house solutions for preventing contamination and pollution. During the emptying process, we can ensure that the packaging materials are kept strictly separated from the contents in the interests of optimum hygiene. Materials left behind by the cutting process are removed via guard screens to eliminate any risk of retaining packaging residues. All our installations are fitted with large inspection hatches and detachable elements so that they can be cleaned quickly and efficiently. And if requested, we can provide you with a bag emptying system that complies with GMP standards, with CIP Cleaning, or has a special coating for extra hygiene and high-care applications.

Possibilities

There is an answer to every question.
We don't think in limitations but in possibilities

Compacting for more efficient waste processing
We are used to automatically processing empty bags and then pressing them into compact packages using our hydraulic baling press or screw compactor. We can also shred empty bags and then process them further in order to remove the very last residues of bulk product before automatically carting off the shreds. This minimizes your labour and particle emissions and also reduces your waste volume to a minimum.

Automatic transition to any type of bag
Regardless of whether you work with wide, narrow, long or short bags and whether they are filled with heavy compact substances such as cement or feather-light silica powders, our systems enable you to automatically transition to a different bag format without the need to adjust or reset the bag emptying installation. The only maintenance needed for the machines involves sharpening the blades. And when it comes to feeding in all those bags, we can set it up exactly as you wish: via conveyor belts, pallet systems or even manually.

Minimizing residue and waste
As empty as you wish: to that end, we use fluidization or mechanical-based activation techniques and rotary screen units. And if you prefer it to be really empty, we can also blow residue out of bags down to even the very last particle (maximum of 0.01-0.1% residue for free flowing products).

We can manage the entire process
Thanks to 60 years of experience in process technology, our expertise is not limited to bag emptying alone. We also have a great deal of in-house expertise when it comes to the intake and transport of even the most difficult powders as well as accurately weighing, dosing, grinding, sieving, mixing and packaging a wide range of materials. We design and develop our own technology and have extensive in-house manufacturing and service facilities.

D-innocenter® testing facilities
Our in-house D-innocenter® testing facility allows us to develop new techniques and to test your products on our machines.

One-stop-shopping

Dinnissen offers you one-stop-shopping in bulk solids applications

Dima® MAN
Description: completely manually fitted bag cutter unit, in dust-free cabin, fitted with manually operated screw compactor unit for compacting bags
Capacity: 80 bags per hour
Operation: The bag is placed on the grating and cut open manually. After being shaken empty, the packaging is fed into the compressor compartment and compressed.

Dima® 100
Description: semi-automatic bag emptying unit with automatic cutting blades and vibrator unit in dust-free cabin, equipped with dust filter and ventilation / central ventilation unit and manual screw compactor for compacting bags
Capacity: 100 bags per hour
Operation: The bags are placed manually in the machine and cut open by a rotating blade via the 2 hand-safety starters. The product is manually shaken out of the packaging, after which the empty bags immediately disappear into the compactor.




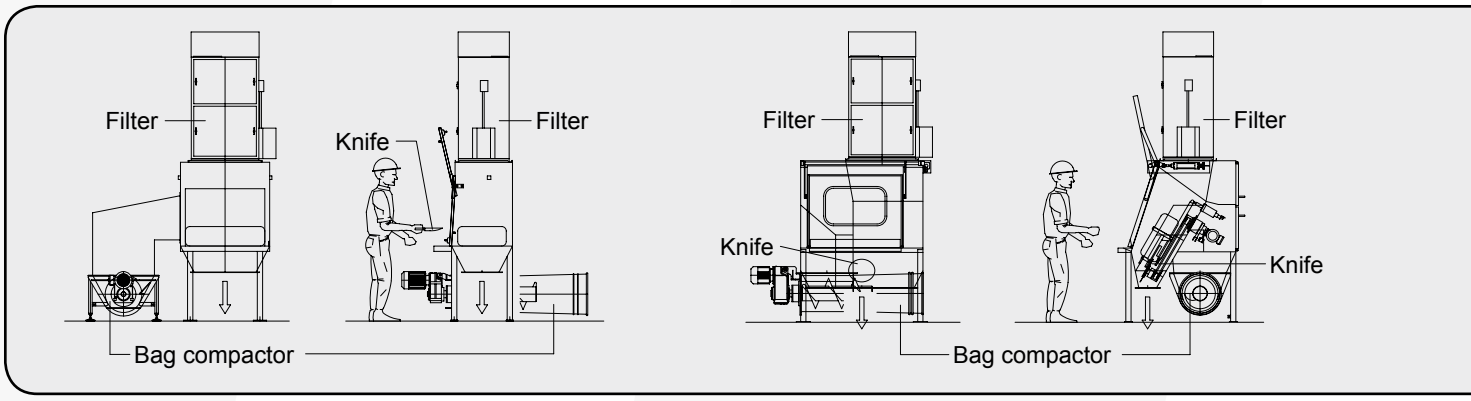

Dima® MAN *Dima® 100*

Testing facilities

Our D-innocenter® testing facility offers ample possibilities for developing new products or testing your existing products.

Dima® 200
Description: fully automated bag emptying system in dust-free cabin with automatic feed option
Capacity: 180 bags per hour
Operation: Bags are fed into the machine manually or via a conveyor belt. After the doors are shut, the emptying process begins. A rotating blade cuts open the bag, which is suspended from two hooks. The emptying process is assisted by vibration, and the empty packaging is automatically fed into the bag compactor.

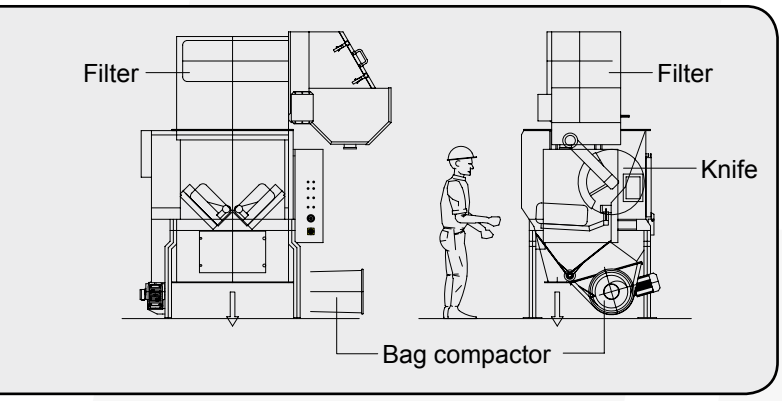

Dima® 200

The best solutions

In a responsive partnership we develop the very best solution

Dima® 300
Description: fully automated bag emptying system in dust-free cabin with automatic feed option.
Capacity: 350 bags per hour.

Dima® 600
Description: fully automated bag emptying system in dust-free cabin with automatic feed option.
Capacity: 750 bags per hour.

Dima® 1200
Description: fully automated bag emptying system in dust-free cabin with automatic feed option.
Capacity: 1500 bags per hour.

Operation of Dima® 300, 600 and 1200
The Dima® 300, 600 and 1200 differ in capacity but operate according to the same principle. Bags are fed into the emptying machine via a conveyor belt or automatic pallet processor, after which the bags are cut open on both sides by two rotating blades and fed into a rotating screen unit, which strictly separates the packaging material from the contents. The empty packaging is then fed out from the rear into the compactor unit. The contents of the bags are collected in a container, whereas the fine particular matter is sucked off in upwards direction.

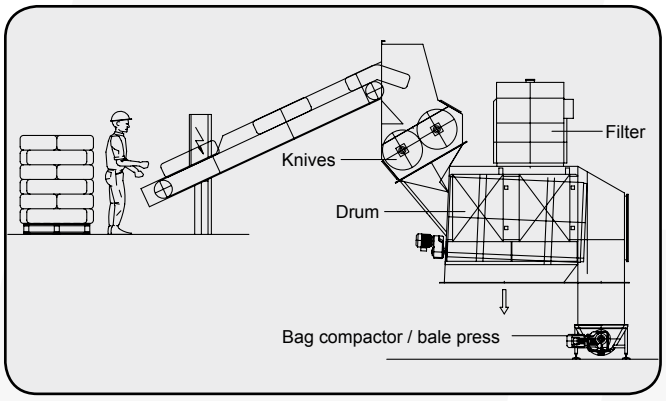

Dima® 300

Video CD

Please ask for our free video CD-ROM with a demonstration of the Dima® bag emptying machines

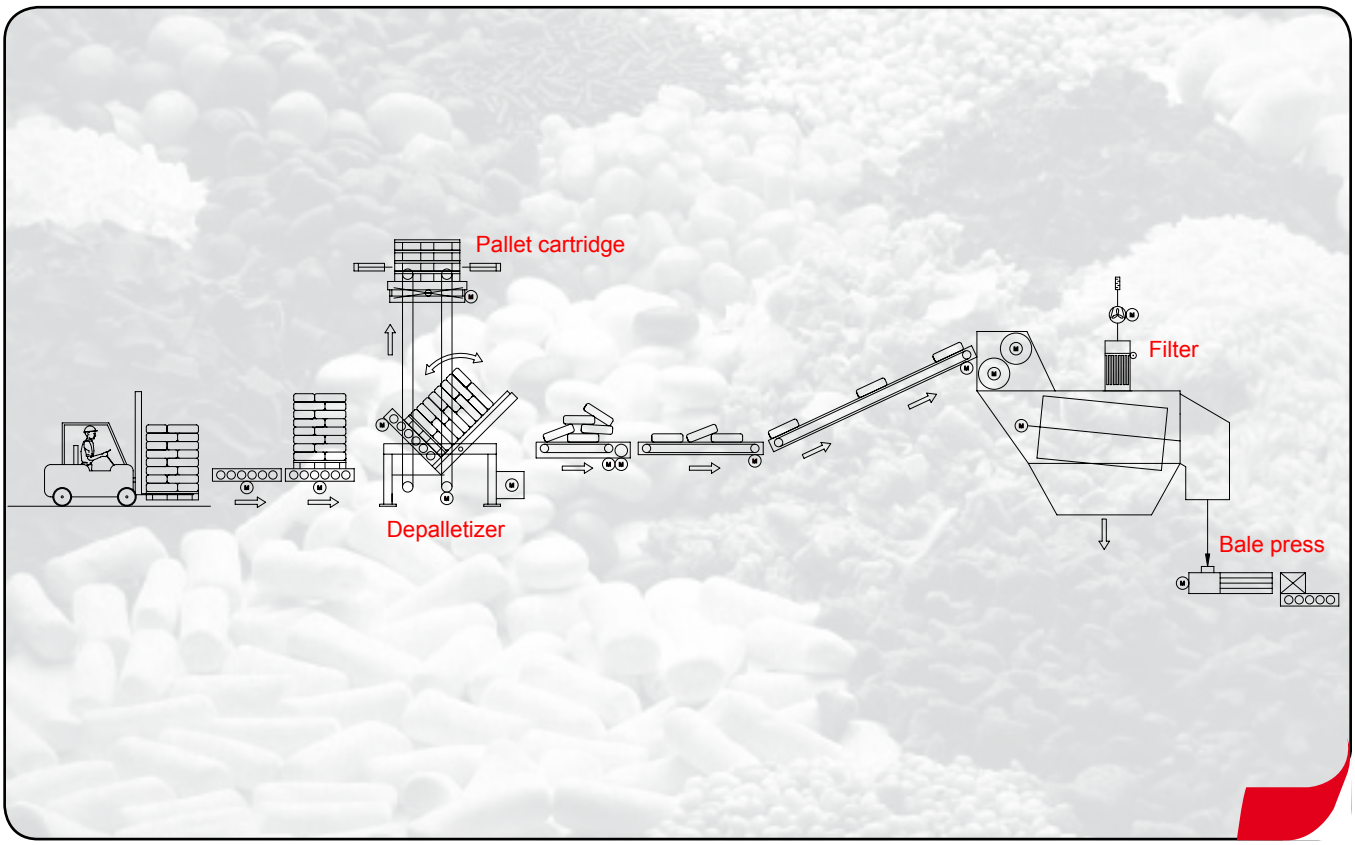

Total process with: depalletizer, empty pallet storage, exhaust filter, baling press etc.

Available options

- Automatic bag feeder unit via (pallet) roller belt
- Storage facility for empty pallets
- Automatic system adjustment for bag format
- Option for brushing off exterior of bags
- Intrinsically safe (explosion-safe) model for hygroscopic powders and granulates
- Steel, stainless steel and coated materials
- Lump breaker
- Controlled sifting
- Pneumatic or mechanical removal of waste
- Vibrating table
- Vacuum bag lifter
- Lifting table

Benefits

- Dust-free operation
- Focus on working safely and efficiently
- Empty down to the very last particle
- Tailor-made solutions for a wide range of (difficult) products
- Extra options for hygienic applications
- Tracking and tracing systems
- Benchmarks and innovative solutions with regard to the risk of gas and dust explosions (Atex guidelines)
- From unloading/emptying stations to complete process solutions
- In-house testing facilities
- Easy to clean

YOUR PROCESS...
...OUR CARE

PET FOOD | FOOD | RECYCLING
AQUA FEED | LIFE SCIENCE | MINERALS
FEED | PHARMACEUTICAL | DETERGENTS
CHEMICAL | PLASTICS

Dinnissen BV
Horsterweg 66
5975 NB Sevenum, the Netherlands
Tel.: +31 (0)77 467 35 55
Fax: +31 (0)77 467 37 85
E-mail: powtech@dinnissen.nl
Website: www.dinnissen.nl

DINNISSEN NATURAL INNOVATORS
PROCESS TECHNOLOGY